Technical drawing (mm / inch)
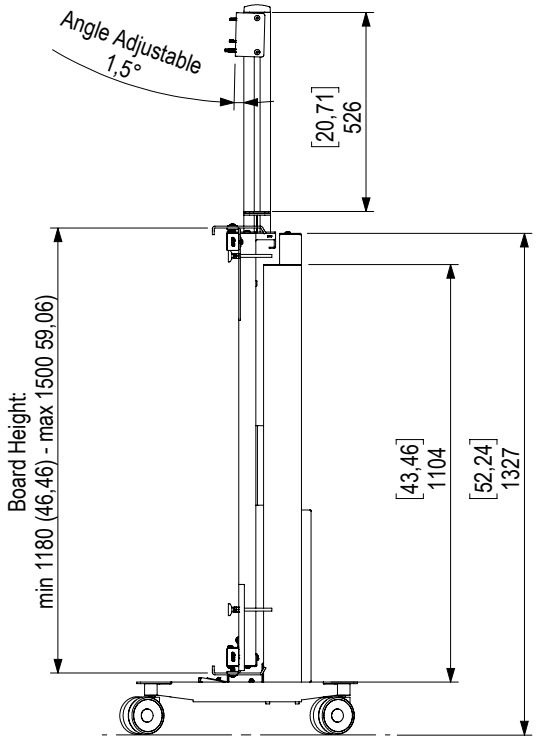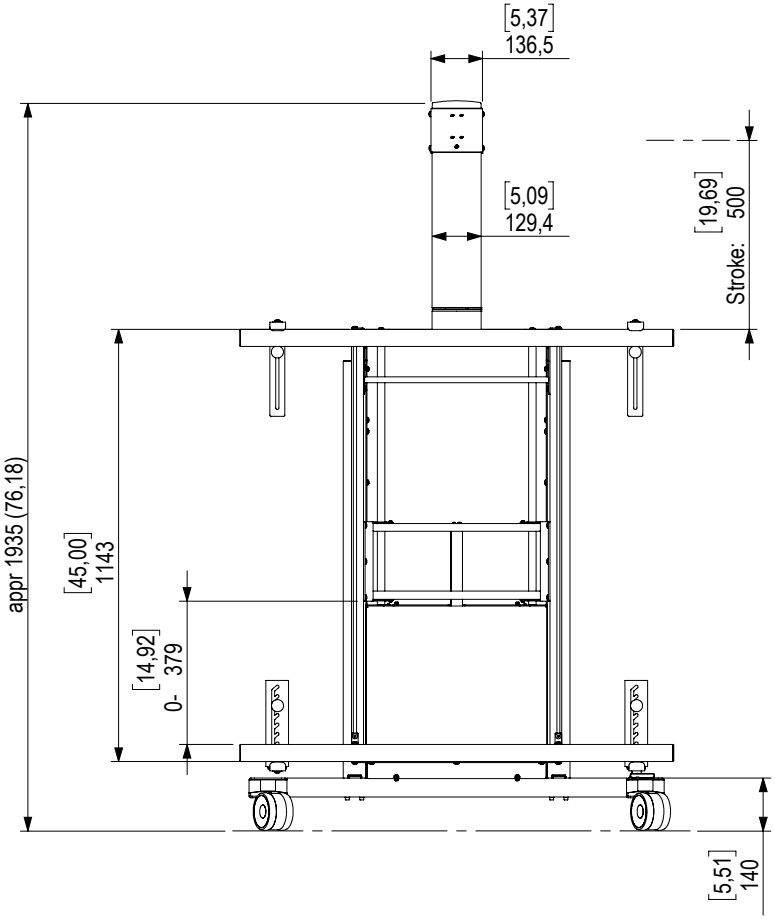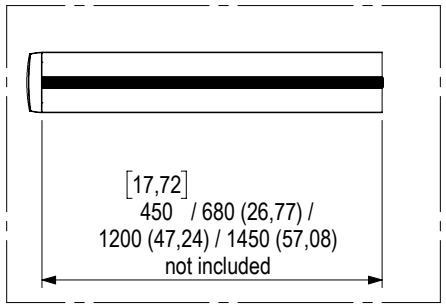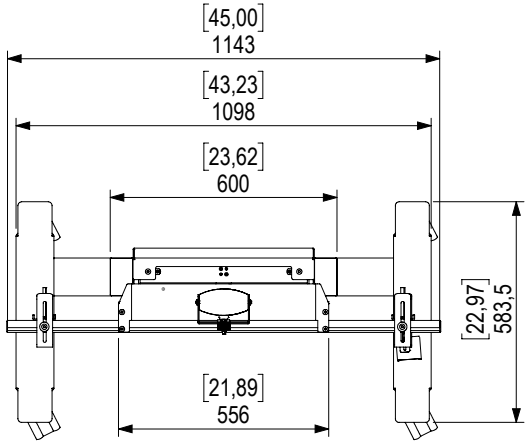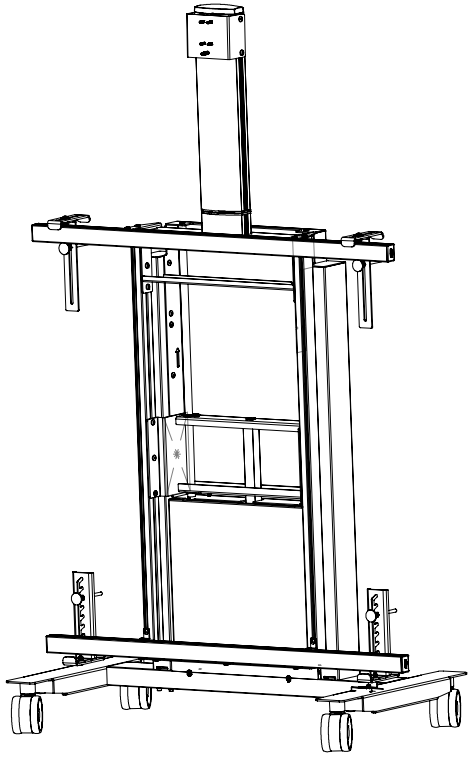
C630001-4C Func Short Throw Mobile Motorized